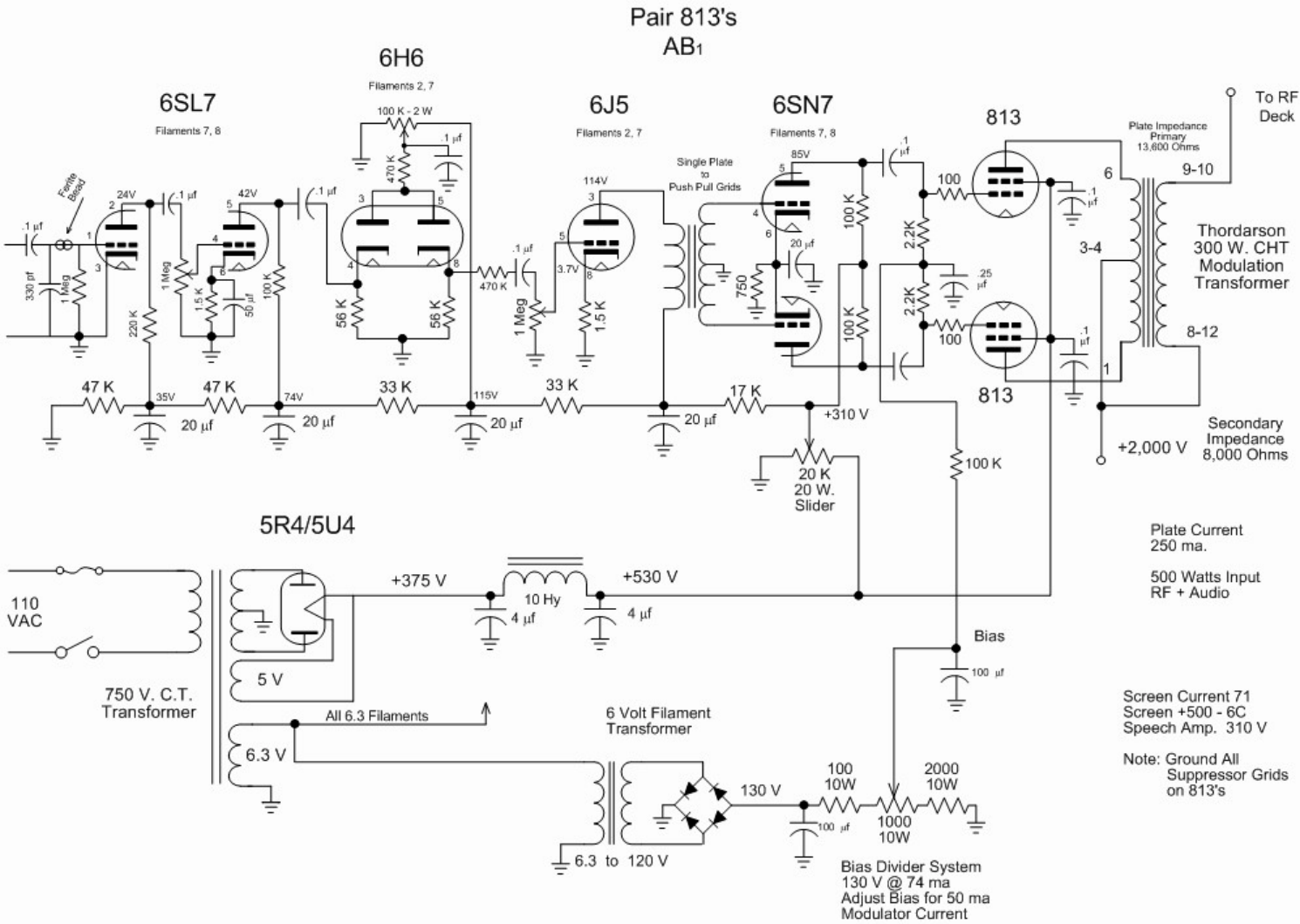
Pair 813's
AB1
6SL7
Filaments 7, 8
6H6
Filaments 2, 7
100 K - 2 W
6J5
Filaments 2, 7
6SN7
Filaments 7, 8
813
813
To RF Deck
Plate Impedance Primary 13,600 Ohms
9-10
3-4
8-12
Thordarson 300 W. CHT Modulation Transformer
Ferrite Bead
Single Plate to Push Pull Grids
24V
42V
114V
85V
35V
74V
115V
3.7V
47 K
47 K
33 K
33 K
17 K
20 µf
20 µf
20 µf
20 µf
+310 V
20 K 20 W. Slider
100 K
+2,000 V
Secondary Impedance 8,000 Ohms
5R4/5U4
110 VAC
750 V. C.T. Transformer
5 V
6.3 V
All 6.3 Filaments
+375 V
10 Hy
+530 V
4 µf
4 µf
Bias
100 µf
6 Volt Filament Transformer
6.3 to 120 V
130 V
100 10W
1000 10W
2000 10W
Bias Divider System
130 V @ 74 ma
Adjust Bias for 50 ma
Modulator Current
Plate Current 250 ma.
500 Watts Input RF + Audio
Screen Current 71
Screen +500 - 6C
Speech Amp. 310 V
Note: Ground All Suppressor Grids on 813's